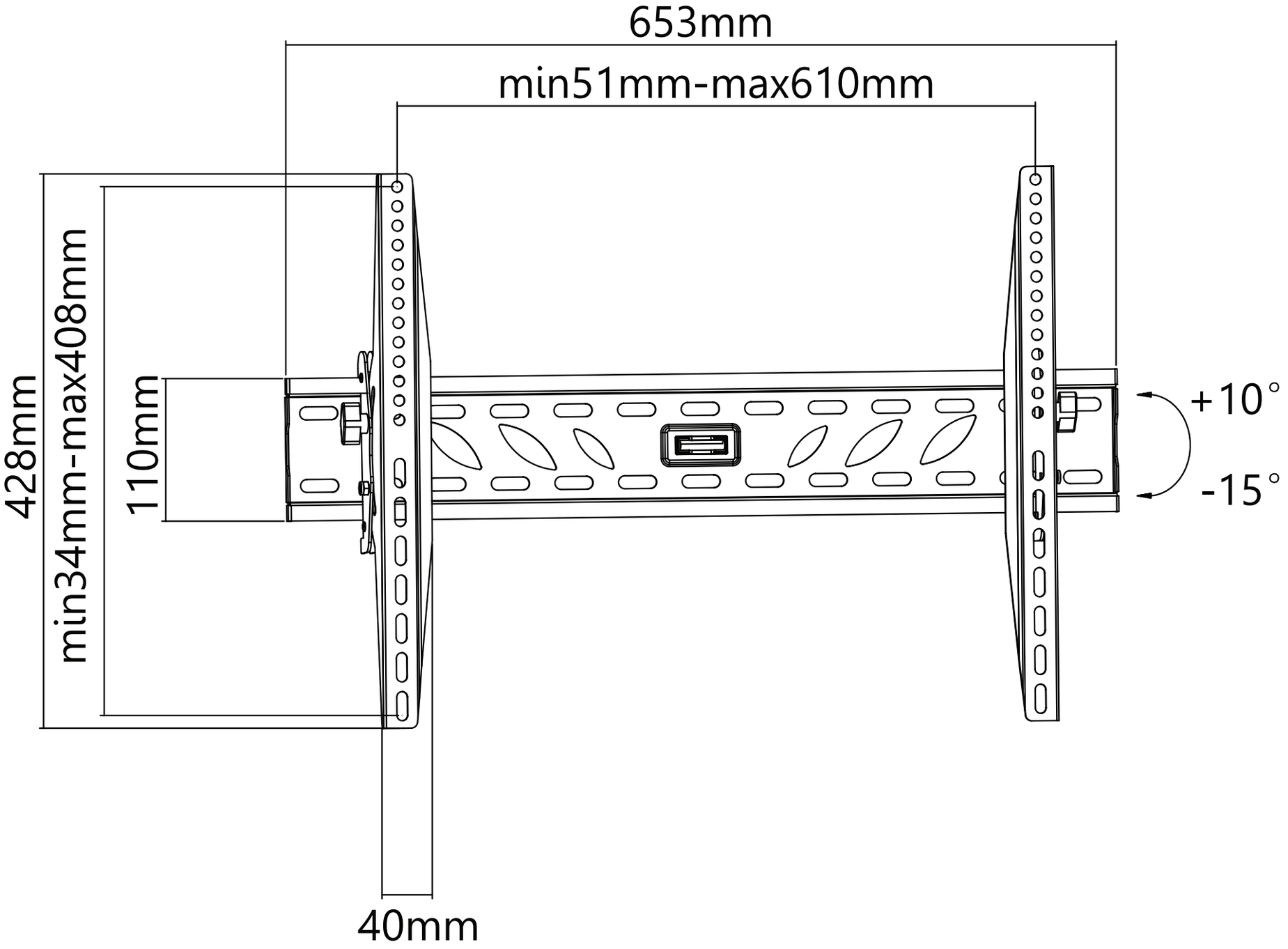
653mm
min51mm-max610mm
428mm
min34mm-max408mm
110mm
+10°
-15°
40mm